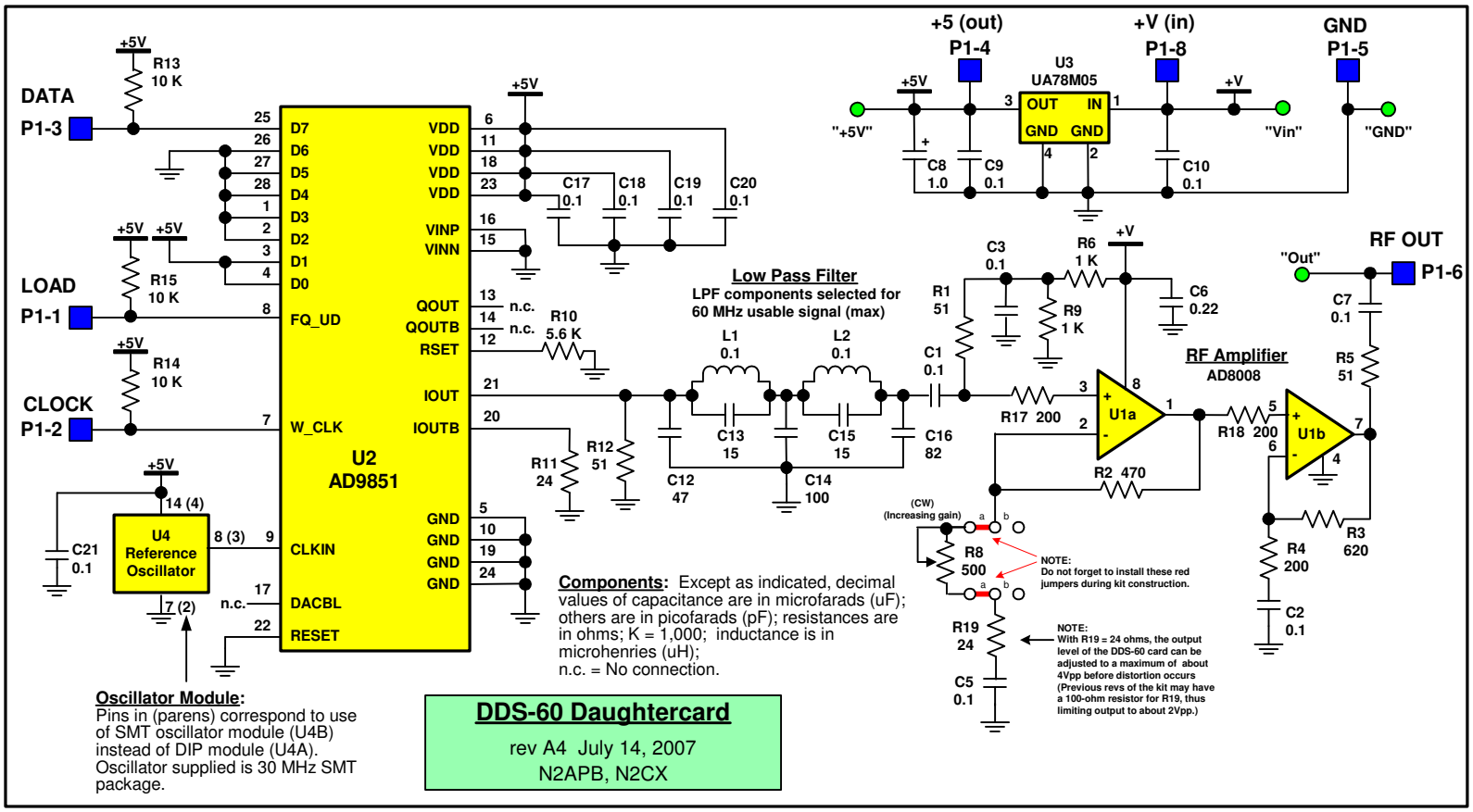
DATA
P1-3
LOAD
P1-1
CLOCK
P1-2
R13 10 K
R15 10 K
R14 10 K
+5V
U2
AD9851
D7
D6
D5
D4
D3
D2
D1
D0
FQ_UD
W_CLK
CLKIN
DACBL
RESET
VDD
VINP
VINN
QOUT
QOUTB
RSET
IOUT
IOUTB
GND
n.c.
U4
Reference
Oscillator
C21 0.1
C17 0.1
C18 0.1
C19 0.1
C20 0.1
R10 5.6 K
R11 24
R12 51
C12 47
C13 15
C14 100
C15 15
C16 82
L1 0.1
L2 0.1
Low Pass Filter
LPF components selected for
60 MHz usable signal (max)
C1 0.1
R1 51
C3 0.1
R9 1 K
R6 1 K
C6 0.22
R17 200
R2 470
U1a
U1b
RF Amplifier
AD8008
R18 200
R5 51
C7 0.1
R3 620
R4 200
C2 0.1
RF OUT
"Out"
P1-6
+5 (out)
P1-4
+V (in)
P1-8
GND
P1-5
U3
UA78M05
OUT
IN
GND
"+5V"
"Vin"
"GND"
C8 1.0
C9 0.1
C10 0.1
(CW)
(Increasing gain)
R8 500
R19 24
C5 0.1
NOTE:
Do not forget to install these red jumpers during kit construction.
NOTE:
With R19 = 24 ohms, the output level of the DDS-60 card can be adjusted to a maximum of about 4Vpp before distortion occurs
(Previous revs of the kit may have a 100-ohm resistor for R19, thus limiting output to about 2Vpp.)
Components: Except as indicated, decimal values of capacitance are in microfarads (uF); others are in picofarads (pF); resistances are in ohms; K = 1,000; inductance is in microhenries (uH);
n.c. = No connection.
Oscillator Module:
Pins in (parens) correspond to use of SMT oscillator module (U4B) instead of DIP module (U4A). Oscillator supplied is 30 MHz SMT package.
DDS-60 Daughtercard
rev A4 July 14, 2007
N2APB, N2CX